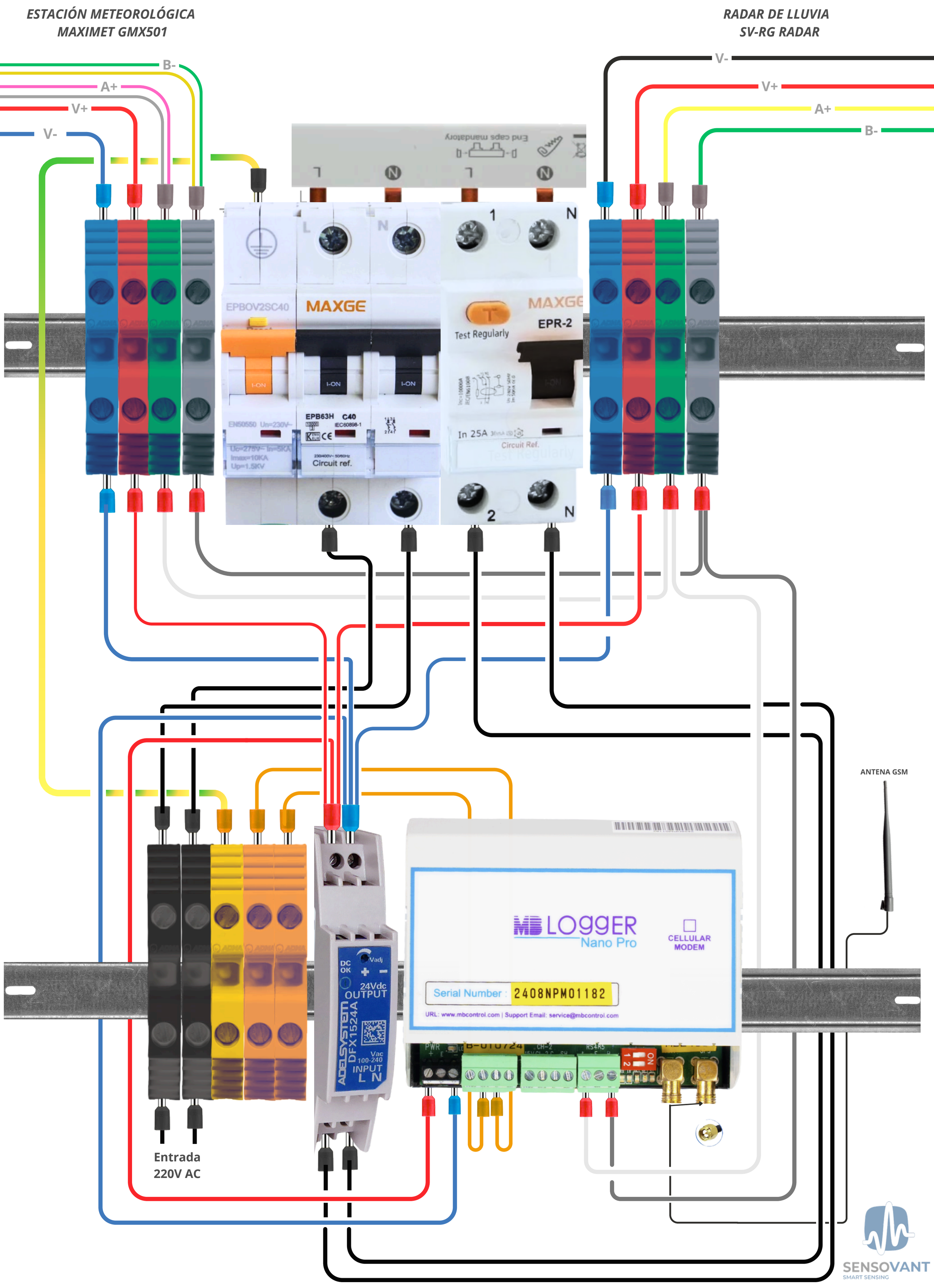
ESTACIÓN METEOROLÓGICA
MAXIMET GMX501
RADAR DE LLUVIA
SV-RG RADAR
B-
A+
V+
V-
V-
V+
A+
B-
MAXGE
EPB63H C40
Circuit ref.
MAXGE
EPR-2
Test Regularly
Circuit Ref.
MD LOGGER
Nano Pro
CELLULAR MODEM
Serial Number : 2408NPM01182
URL: www.mbcontrol.com | Support Email: service@mbcontrol.com
ANTENA GSM
DC OK
Vadj
24Vdc OUTPUT
ADELSYSTEM DFX1524A
Vac 100-240 INPUT
L N
Entrada
220V AC
SENSOVANT
SMART SENSING